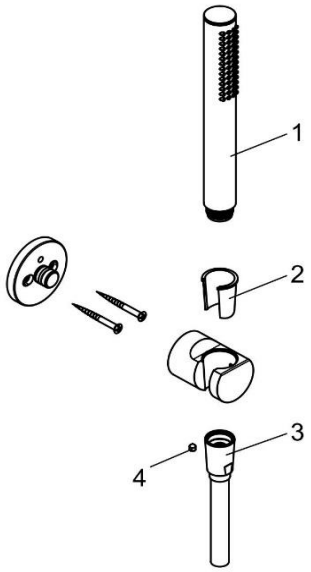

2085005-15		Brause- Set	shower set
1	3912005-00	HANDBRAUSE	HANDSHOWER
2	81915531-00	KONUSHÜLSE	CONUS SLEEVE
3	6107105-00	BRAUSESCHLAUCH	SHOWER HOSE
4	92204601-00	GEWINDESTIFT	GRUB SCREW